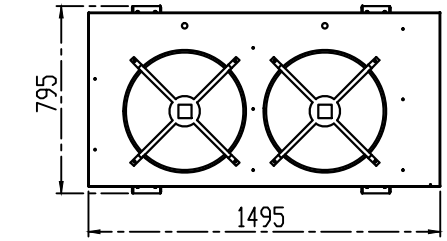

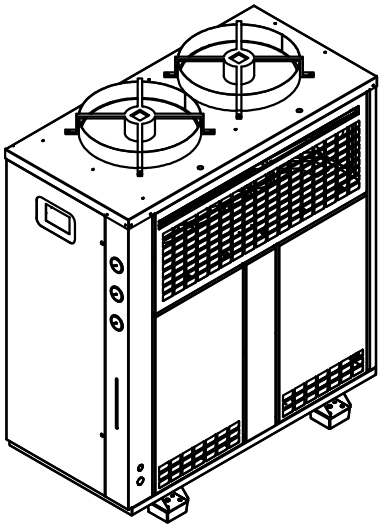

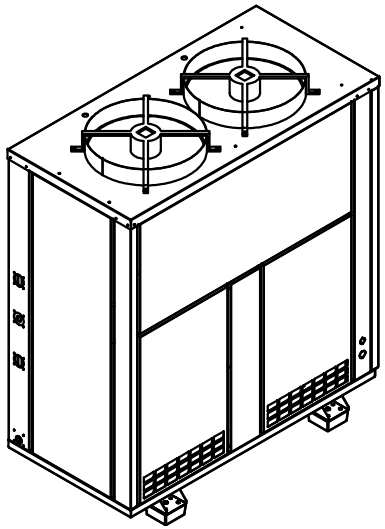

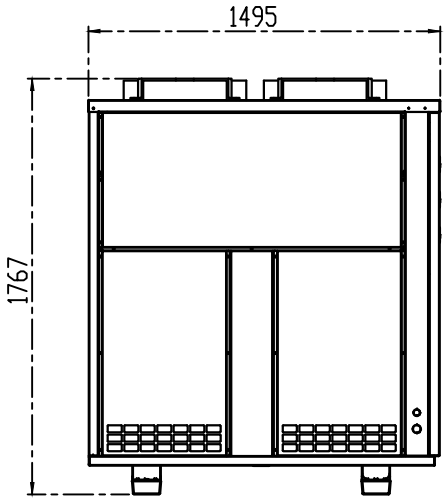

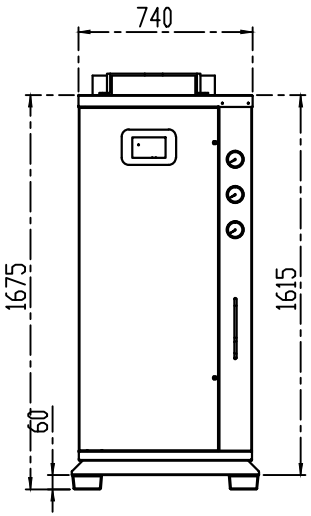

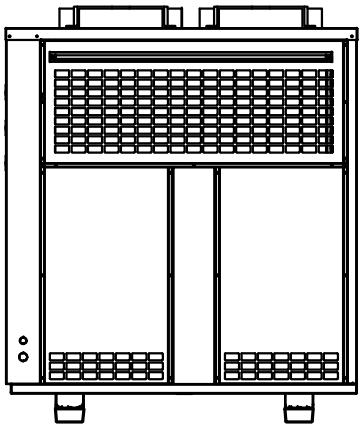

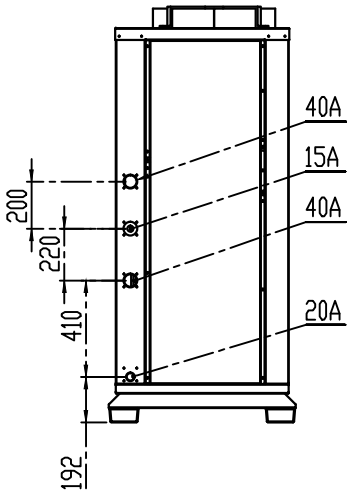

SURFACE FINISH

DRG.NO DMB-N075-ソフト・・ハ-REV2 A3

GENERAL TOLERANCE (MACHINING)			UNSPECIFIED CHAMFERS	C0.5	APPROVE		TITLE	DMB-N075	Q'TY	1EA
LIMITS OVER ~ TO	MINUTENESS	NORMAL	UNSPECIFIED RADII	R1	CHECKED		ASS'Y	ソフト・ハ	SCALE	1:20
0.5 ~ 6	± 0.05	± 0.1	HEAT TREATMENT HARDNESS		DISIGNED	J.H.MOON	MODEL	---	MAT.	---
6 ~ 30	± 0.1	± 0.2					---		W,T	287.43kg
30 ~ 120	± 0.15	± 0.3	HEAT TREATMENT METHOD		DRAWN	J.H.MOON			DRG.NO A3	DMB-N075-ソフト・・ハ-REV2
120 ~ 315	± 0.2	± 0.5					PROJECT NAME			
315 ~ 1000	± 0.3	± 0.8	SURFACE TREATMENT	PAINT	DATE	2020-12-23	CHILLER		DAEIL	DAEIL CO., LTD
1000 ~ 2000	± 0.5	± 1.2								
2000 ~ 4000	±0.8	±2.0								

SUFFIX	MARK	SUBJECT	ENC NO.	DATE	DRAWN	CHECKED	APPROVE
	3 X						
	2 X						
	1 X						

A3 (297X420)